IEEE Access
Multidisciplinary : Rapid Review : Open Access Journal

Received November 15, 2019, accepted January 5, 2020, date of publication January 29, 2020, date of current version February 18, 2020.

Digital Object Identifier 10.1109/ACCESS.2020.2970220

Olfactory-Based Augmented Reality Support for Industrial Maintenance

JOHN ERKOYUNCU[1] AND SAMIR KHAN[2], (Member, IEEE)
[1]Manufacturing Department, Cranfield University, Cranfield MK43 0AL, U.K.
[2]Department of Aeronautics and Astronautics, The University of Tokyo, Tokyo 113-8656, Japan

Corresponding author: John Erkoyuncu (j.a.erkoyuncu@cranfield.ac.uk)

This work was supported by the Engineering and Physical Sciences Research Council (EPSRC) under Grant EP/R013950/1.

ABSTRACT Augmented reality (AR) applications have opened innovative ways for performance improvement in the IoT industry. It can enhance user perception of the real-world by providing valuable information about an industrial environment and provide visual virtual information onto a head-mounted device (HMD). Such information is important for maintainers to quickly detect abnormalities, reduce nugatory routines and facilitate preventive maintenance activities. Since odors are made up of volatile compounds at low concentration, they can be used for olfactory-based identification. The article outlines the development of an olfactory-based AR system to help with the identification of maintenance issues using smell. The prototype comprises of three components: an electronic nose, a database and an AR application integrated with Microsoft HoloLens. After diagnosing an odor, the data is sent wirelessly through a local network to the HMD worn by the user. To validate the technology, four odors have been used, including engine oil, sun lotion, medical alcohol and perfume, to record behaviors and demonstrate the repeatability of the process. The presented technology incorporates sampling methods, cleaning processes and statistical analysis that can be further scrutinized to allow better smell augmentation for diagnosis.

INDEX TERMS Augmented reality, gas and odor identification, electronic nose prototype, industrial maintenance.

I. INTRODUCTION

Augmented Reality (AR) is a view of the real, physical world in which elements are enhanced by computer-generated input. It has come a long way from science-fiction concepts to a science-based reality. Until recently, the costs of AR systems were so substantial that it was difficult to work on design projects that involved it. However, today things have changed, and AR is even available on mobile handsets. Its inputs can range from sound to video and graphics to global positioning systems [1].

AR was arguably first achieved by cinematographer Morton Heilig in 1957, who envisaged delivering visuals, sounds, vibration and smell to the viewer [2]. It was the first example of an attempt at adding additional data to experience. Later developments by Ivan Sutherland added towards the first head-mounted display (HMD), which saw improvements due to computer and devices technologies. The first functioning AR system was developed at USAF Armstrong's Research Lab by Louis Rosenberg in 1992. It was called *Virtual Fixtures*, an incredibly complex robotic system designed to compensate for the lack of high-speed 3D graphics processing power in the early 90s [3]. It enabled the overlay of sensory information on a workspace to improve human productivity. Since the 2010s, AR has become accessible to the wide public, especially in the video games sector [4]. AR can apply to all human senses, including hearing, touch, smell and even taste, however, in contrast to visual, the lack of developments in the other senses can be attributed to their complexities and limited application knowledge. Yet, AR has found technical and economically viable applications in almost every field such as defence, industry, medical, education, and entertainment. By providing additional information in real-time, AR has potential for improving industrial maintenance activities [5]–[8]. As a support device, AR has already proven its ability to improve efficiency, rapidity, precision and safety of workers during maintenance operations [9]–[11]. A practical example of an AR-based application in an industrial shipyard environment has also been published [12]. Similarly, for maintenance, the focus is often placed on visual perceptions by changing the user's visual environment and smell. Since research on

The associate editor coordinating the review of this manuscript and approving it for publication was Abdel-Hamid Soliman.

This work is licensed under a Creative Commons Attribution 4.0 License. For more information, see http://creativecommons.org/licenses/by/4.0/

smell sensing is still at an exploratory stage [13], a substantial evolution of diagnosis and control for maintenance can be considered by manufacturers with electronic-noses (e-noses) to identify odors [14]. Due to its potential and capacity to be integrated into IoT, this provides a unique opportunity to contribute towards rapid development of an olfactory-based AR system to not only improve productivity, efficiency or quality of experiences but also as a pioneering technology for monitoring systems [15]–[17].

A. CONTRIBUTIONS

This article aims to make advances in industrial maintenance by developing an innovative low-cost user-friendly olfactory-based AR system. The device can recognize significant odors already encountered and saved in its database. It demonstrates useful information concerning the identified smell to ease and improve a potential maintenance operation. To summarize the main contributions at the outset, include:

- A state-of-the-art of AR-based smell sensing to understand the complex concepts of odor identification. This is to acknowledge the most relevant AR technologies to be used in a maintenance context;
- Development of a low-cost e-nose to analyze smell and proceed to odor identification;
- Development of the AR environment and database. This provides useful information to the user, including the communication between the e-nose, that retrieves the smell inputs, and the AR device, that provides the data to the user.

The overall goal is focused on mixing odor detection with AR for maintenance applications. Currently, olfactory-based research work shows interest in developing an innovative method to evaluate the state of their infrastructures by analyzing odors [18]–[20]. This article evaluates a systems' condition (or an environments' air) by identifying smells in near real-time and displaying correlated information on a HMD worn by the user. To perform the research, a prototype of a connected e-nose has been developed and mixed with Microsoft HoloLens - AR smart glasses. With it, maintainers will be able to quickly analyze and identify any defects during their patrols. AR will provide essential data about the presumed problem and display instructions/animations to efficiently fix the problem.

The rest of the article is structured as follows: the background to the problem is covered in Section 2 which includes both the current development stages and advances of electronic odor detection and AR applications. The steps of building Augmented Reality Olfactory Device (AROD), a prototype developed in this paper, and presented in Section 3, with the development of the e-nose hardware and software. Section 4 explains the AR implementation of AROD. Section 5 presents some conclusions from the preceding analysis and suggests future developments and improvements of the AROD for maintenance applications.

II. THEORETICAL BACKGROUND

The purpose of AR is to enhance the perception of the real world of the user. Currently, it concerns mostly sight, hearing and touch senses whilst plenty of applications and devices have been created. However, there is a scarcity of applications for smell and taste due to their complexities.

A. VISUAL, HAPTIC, AUDITORY AND TASTE

Visual AR has approached technical maturity. Enhanced visual stimuli can be displayed to a HMD or projected on any other surface such as a cockpit. It is mostly based on three different approaches: a visual-see-through AR or Non-optical-see-trough AR where the user wears a fully-opaque HMD on which captured video from on-device mounted cameras is projected besides Computer-Generated (CG) information. The optical-see-through AR where the user wears a transparent-glass HMD allowing participants to see the real world. CG information is displayed on the transparent glasses. The most famous example is Google Glass. Finally, the utilization of Head-Mounted Projection Display (HMPD) enables CG images to be generated from the eye-point of the user onto the environment using half-silvered mirrors [21]. In the case of haptic AR, its concepts were first introduced by French researchers by analogy with visual AR. The haptic enhancing concept was considered to map non-haptic information into haptic feedback to deliver extra information to the user [22]. Several applications have been developed to reproduce either the kinaesthetic (motion, force) or tactile (tact, touch) sense of haptic. Further work was done by using a connected glove that receives haptic feedback when a user grabs a virtual object in a game. The glove is light-weighted enough not to disturb movements and operates by applying a modulated pressure on located areas of the glove through inflating air cushions. In addition, joysticks, steering wheels or exoskeletons with force feedback are already being used in teleoperation applications such as remote surgery or industrial robot manipulation. Most of these devices are concentrated on the hand sensation, enhancing the perception with vibrations. However, researchers of Project Sarotis (University College London), have started to develop full haptic suit which will transcribe the user movement and provide him/her haptic feedback of his/her virtual reality experience. To summarize, haptic AR has been used for:

- Emotions communicated by vibrotactile patterns [23];
- Gaming glove enabling grabbing object sensation [24];
- Guiding hand tool to teach specific skills;
- Abstract notions teaching like electromagnetic fields, fluid dynamic or stress analysis using a haptic stylus [25];
- Haptic feedback of micro and nano-scale quality surfaces [22].

Another useful development is audio AR, which is being used for directional assistance, to overcome visual limits, to enhance interactions in gaming or tourism fields. Currently, there are three different means of delivering audio stimuli for

an AR application where the enhanced sound is delivered by speakers placed in the real environment. With this method, the user can perceive both real and CG sounds. Nonetheless, attached speakers limit the range of the enhanced experience to a restricted area. Furthermore, sounds are captured by at least two mounted omnidirectional microphones and overlaid by CG sounds delivered by headphones using microphone-hear-through AR. This technique presents several advantages such as attenuating or amplifying the level of natural sounds (Aalto University Department of Media Technology, 2016). An enhancement using acoustic-hear-through AR was also introduced where CG sounds are delivered through bone conduction while real environment noises can normally be heard by the ear canals of the user. One current application of this technique is the Duo^{TM} developed by Finisinc that allows listening to music underwater [26].

The sense of taste is complex. Although it is considered as a combination of minor known sensations (saltiness, sweetness, sourness, bitterness and umami) on the tongue, it nevertheless requires a multi-modal use of the other senses. In fact, according to psychophysical studies, taste is not only influenced by the sense of smell but also by touch, sight, hearing and by the trigeminal system. But, in terms of AR, applications on taste and smell seem limited as it requires the use of chemicals. Nevertheless, Japanese researchers have developed an AR device aiming to change the perception of the taste of a real cookie with AR markers by combining an AR visual and olfactory information overlaying onto it. This device, named *MetaCookie+*, is composed of four elements: an olfactory display composed of eight different air pumps delivering either fresh air or aromatic chemicals, a cookie with printed pattern onto it, a cookie tracking unit composed of two cameras and an overlaying visual information unit. This device had been tested on 44 participants who had to select a cookie among 7 different flavours and displays and eat it without knowing that they were eating a cookie but with different scents and overlaid images. The experiment concluded with more than 70% of the participants claiming that the taste of the cookie was similar to their choices. Finally, this technology is expected to find application to ease the consumption of hospital or diet food which can be distasteful [27].

B. SMELL

Similar to taste AR, smell AR is also considered as a scientific challenge to be understood and to be able to reproduce [28]. Many researchers are still at an early stage of comprehension as limited applications have appeared in the literature [27]. Technologies concerning smell can be divided into two complementary parts, which are either on how to track smell (and differentiate and recognize any odor), or how to recreate and emit an existing or captured odor.

1) SMELL TRACKING PRINCIPLE

Smell tracking devices are called electronic noses or e-noses. A number of e-noses have been developed since the last twenty years following the advances of sensors. The principle of the device will be developed in the next section concerning smell identification. Industrial application of e-noses is mainly used for gas detection, food safety and disease diagnostics. However, in term of AR, only a few projects exist in the form of research projects such as an odor wearable display used in an outdoor environment to create odor [29].

Scent emission principle: The perception of an odor often occurs after breathing volatilized chemical compounds at low concentration. Currently, most of the applications and device emitting scents only delivered referenced standard aromas. Thus, basic odors (e.g. lemon, chocolate, fire) can be delivered to either air pump, odor ink projection or odor evaporation. However, the possibility of recreating a perceived odor is still under study. Indian researchers have suggested a methodology to transfer by internet an odor, which will be remotely recreated through a device that will mix different essences [30]. In terms of AR, the previously presented MetaCookie+ device projects up to eight different odors of flavors via air pump [27].

2) AROMA COMPOSITION AND THE HUMAN SENSE OF OLFACTION

An aroma, also being called smell, odor or scent is made of small molecules called Volatilized Chemical Compounds (VCC) present in the air at low concentration. It can be composed of only one single chemical compound or multiple compounds with one or several predominant components especially in the case of Volatile Organic Compounds (VOC) that composed a high proportion of odors. Each aroma is characterized during tests by four criteria in general:

- Odor threshold: specific to each aroma depending on its chemical composition which represents the minimum concentration where 50% of the tested population (human, animal or electronic) detects the odor;
- Intensity: increases in function of the concentration of the smell, describe the strength of the aroma;
- Quality: describes among already known aromas which one is perceived as the most similar to the tested aromas. The different known scents have been sorted into eight different groups easily differentiable by human olfaction [31];
- Hedonic assessment: allows to evaluate the level of pleasantness or unpleasantness of a smell [32].

However, when an e-nose is used, only the odor threshold and the intensity dimensions are relevant as they can be quantified by sensors. After having highlighted the composition of an aroma, it is fundamental to briefly explore how the human olfactory sense works to understand the biological process of smell acquisition and identification to potentially make analogies on an e-nose device. The ability to discern a smell deeply varies among humans; it depends on abundant factors such as age, gender, smoking habits, physical and mental health or fatigue. The average detection is still unknown [33]. The human olfactory system principle is nowadays acknowledged

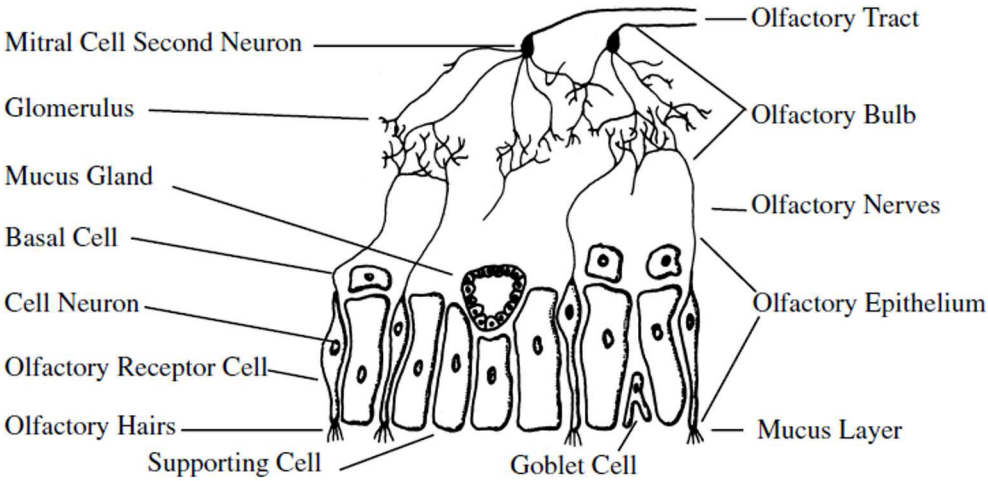

FIGURE 1. Details of olfactory cells in the human nasal cavity.

by the scientific community according to the following theory. Figure 1 illustrates the olfactory receptor cells in the human nasal cavity. There are an estimated 100 million cells in a human nose, which collects chemical substances using olfactory hairs, followed by an electrical impulsion via nerves and neurons to the brain to identify its type.

To collect smell particles, two theories coexist. On the one hand, the physical theory explains that olfactory receptors react with molecules depending on their shapes. Thus, in the function of the different stimulated receptors cells, an odor will be identified. On the other hand, the chemical theory proposes that the odorant molecules bind chemically with proteins produced on the olfactory hairs. The types of receptors stimulated creates different impulses to the nerves that correspond to a specific odor. The level of particles needed to send the impulse is consequently correlated with the odor thresholds of each aroma.

3) ODOR IDENTIFICATION USING AN E-NOSE

A smell is identified through several means such as human olfactometry, Gas Chromatography coupled with Mass Spectrometry (GC/MS) or chemo-electronic sensors composed of an e-nose [34]. In this study, the process of smell detection will only be focused on the e-nose characteristics and composition. An e-nose is an electronic device aiming to reproduce the human olfactory system. It is usually composed of three different modules:

- A system sampling the odorant air under analysis;
- A module enabling to measure the sample characteristics and composed of an array of multiple sensors [32];
- A unit processing the collected data to produce exploitable results.

The sampling system is used to draw the odorant molecules into the system following standard conditions. It can be performed using different techniques such as diffusion, bubblers or canister and odor bags sampling [35]. The various sensors transduct chemical inputs (mostly gas concentration) or physical inputs (temperature, pressure, etc) into outputs based on voltage, current, resistance or impedance changes, electric fields or oscillation frequency. Each sensor has different selectivity with the highest one to a specific group of chemical compounds [34]. Thus, by mixing the sensor responses a chemical identity or fingerprint of the smell under analysis can be obtained. The higher the number of sensors the completer and the more precise the identification of the aroma. Currently, existing e-noses can be constituted of up to 40 sensors [36]. As they are still not able to recognize chemically the compounds under study, e-noses have to be trained to identify a scent. In fact, the odor fingerprint of the smell is required to be recorded into the database of the e-nose before any analysis. Hence the experiment results will be compared to the saved data of the databases and already-encountered odors will be identified.

To sum up, the principal function of an e-nose can be defined as:

- The aroma molecules are delivered to the sensor array system;
- The sensor is enclosed to get a constant temperature and humidity level not to affect the adsorption of the molecules;
- Then the chemical information is converted into an electrical signal to an electronic transistor;
- The analogical electrical signal is converted into a digital one so that a microprocessor can analyze it and recognize the aroma molecules.

III. AR OLFACTORY DEVICE DEVELOPMENT

The purpose of developing an olfactory-based AR device is to explore novel means of detection with smell analysis and a way to quickly communicate useful information to a maintainer working with industrial equipment. The literature review helped establish the requirements of the basic design

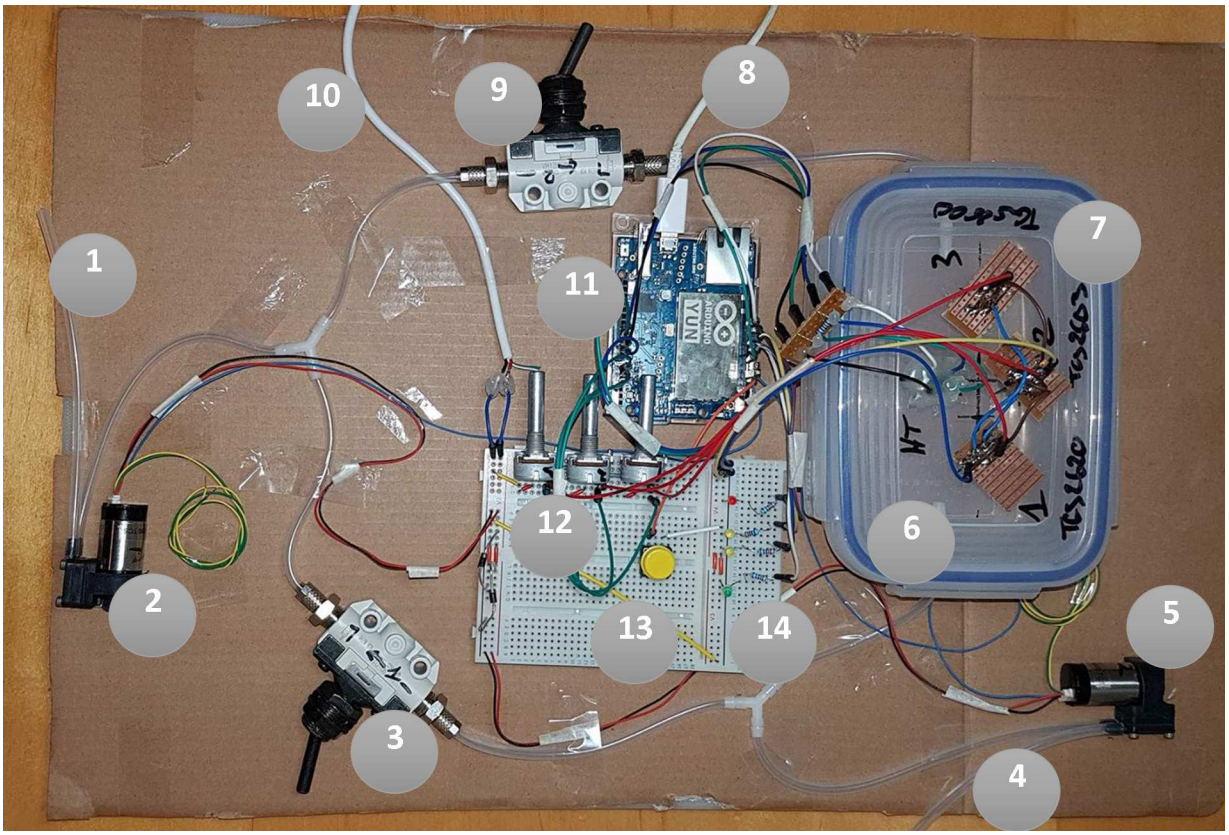

FIGURE 2. Prototype of the AROD e-nose.

under development and highlighted a number of AR applications that can make use of such a device. With the AR Olfactory Device (AROD), a user can typically start the process by launching an analysis of the surrounding air around them. This air will be analyzed through an e-nose module that will measure sensor variation and consequently highlight an odor identity. The results will then be saved into a database and compared to the already-stored identities, allowing the identification of the odorant air under analysis. Finally, the user will be provided with an analysis report, containing items such as temperature and humidity percentage, sensors mean values, the detected smell, the potential cause of the smell and advice/methodology to troubleshoot the defect - all through the AR application that will be displayed on an HMD like the Microsoft HoloLens.

To be adaptable, data communication between all AROD modules have been designed to be wireless. This presents some advantages: firstly, the device will be able to communicate with remote servers that centralize all the data. Each time a new scent, linked to a recognized maintenance issue, will be formally identified using odor thresholds. This information can be sent to different teams/departments/factories to help troubleshoot problems and share knowledge. Besides being connected to the whole network, the AROD database could also be shared globally between equipment/machine suppliers/manufacturers, either as a collaborative tool or as a paid-for maintenance service [37]. Suppliers can, therefore, upgrade their post-sale customer services by providing odor data packages related to known issues in addition to their product services. Secondly, wireless communication will allow not to physically bind together the modules with electric wires. As a consequence, the device will be more ergonomic and easier to use by the maintainers as less movement-restricted. Finally, one major specification of this research was to create a low-cost device that can be easily reproduced to compete with relatively expensive existing e-nose products that exist. This will consequently make smell analysis accessible to academic research groups.

The following discusses the different steps of development of each of the three modules (e-nose, database and AR application) of the proposed device. Recent low-cost e-noses have been developed largely by universities. Particular attention has been paid on CAPINose, a compact and low-cost portable e-nose developed by a research team from the University of Extremadura in Spain. In fact, Macias at al. introduced the basics of an affordable home-made e-nose [38]. Considering the simplicity and the efficiency of this device, parts of the main framework of CAPINose concerning air flows with injections and cleaning steps have been utilized in the AROD's e-nose prototype. A view of the developed device is presented in Figure 2, with its component description in Table 1.

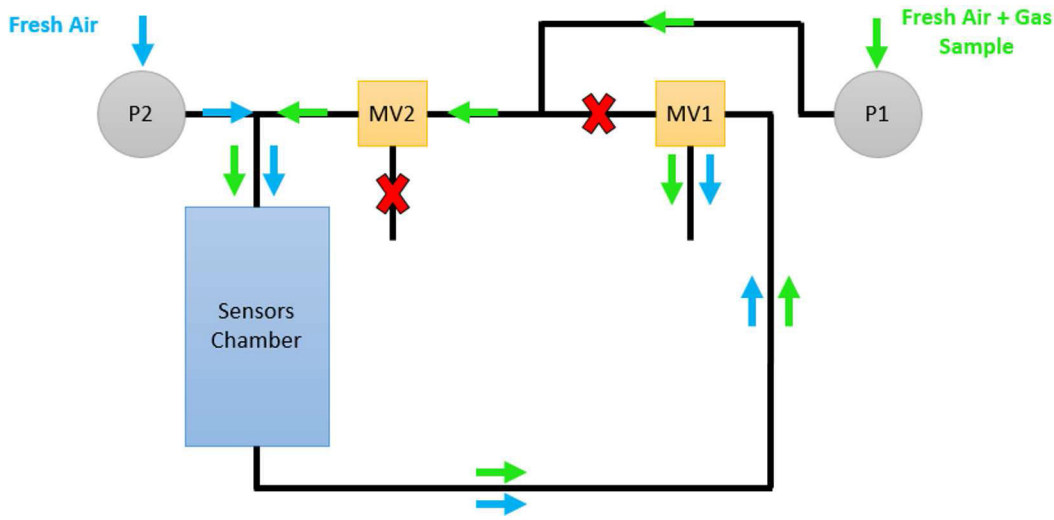

FIGURE 3. Tube circuit configuration for the injection and calibration stage.

TABLE 1. Components of AROD's e-nose in Figure 2.

No.	Component
1	Odorant air input
2	Micropump 1
3	Manual valve 1
4	Fresh air input
5	Micropump 2
6	Sensors chamber
7	Sensors of Table 2
8	Control circuit power supply (+5V)
9	Manual valve 2
10	Power circuit power supply (+5V)
11	Arduino Yun
12	Load resistances (potentiometers)
13	Push-button
14	Control LEDs

A. E-NOSE COMPOSITION

The e-nose is composed of two micropumps, two manual valves and a sensor chamber containing four sensors connected together with flexible silicone tubes and controlled by an Arduino Yun[1] coupled with a parameters control circuit on a breadboard. Analysis with the e-nose is based on the dynamic heading sampling method [39]. The micropumps suck both odorant air under analysis and fresh air into the e-nose circuit. It creates sufficient airflow by directing the odor to the sensor chamber, where the sensors will react depending on the smell. The manual valves are used to switch the tube circuit path between analysis and cleaning mode. Hence, three different gas circuit configurations are set up: the injection and calibration sequence in Figure 3, is the normal mode of the e-nose enabling the sensor calibration and the odors measurements. The odorant air is mixed with fresh air that has the role of smell molecules carrier. Figures 4 and 5 show the cleaning sequences that allow the entire circuit to be cleaned by injecting fresh air in each tube section to remove any odorant residues.

The sensor chamber is made of a hermetic plastic, *Tupperware*, in which four sensors have been fixed and their connections impermeabilized with hot glue. The Arduino Yun controls every sequence of the e-nose and collects and adapt all the sensor values before sending them to the external database through wifi. The four LEDs enable the user to visualize which sequence is running in the e-nose. The red LED indicates the calibration stage, the green indicates the injection and analysis stage and each yellow LED shows the different cleaning stages. The user can request the sequences of the e-nose via the yellow press button following the instructions of a computer-based console, and can also modify the sensors load resistances by turning the shafts of the three potentiometers present on the breadboard. The whole device is powered with +5V. However, different voltage sources are used for the control circuit (which contains the Arduino), and the sensors/power circuit (which powers the micropumps). The micropumps have brushless DC motors that not only require more current but can also deteriorate the Arduino card. As a result, there are two different +5V power sources for the e-nose.

B. HARDWARE SENSORS

The prototype is composed of three gas sensors, a temperature sensor and a humidity sensor as listed in Table 2.

The three gas sensors TGS2600, TGS2603 and TGS2620 are composed of a metal oxide semiconductor alumina substrate layer and of a heater that helps to keep constant values of temperature and humidity while operating. Each sensor is

[1]The Arduino Yun is a microcontroller board based on the ATmega32u4 and the Atheros AR9331. The board has built-in Ethernet and WiFi support, a USB-A port, micro-SD card slot, 20 digital input/output pins and built-in USB communication; offering the capability of a powerful networked computer.

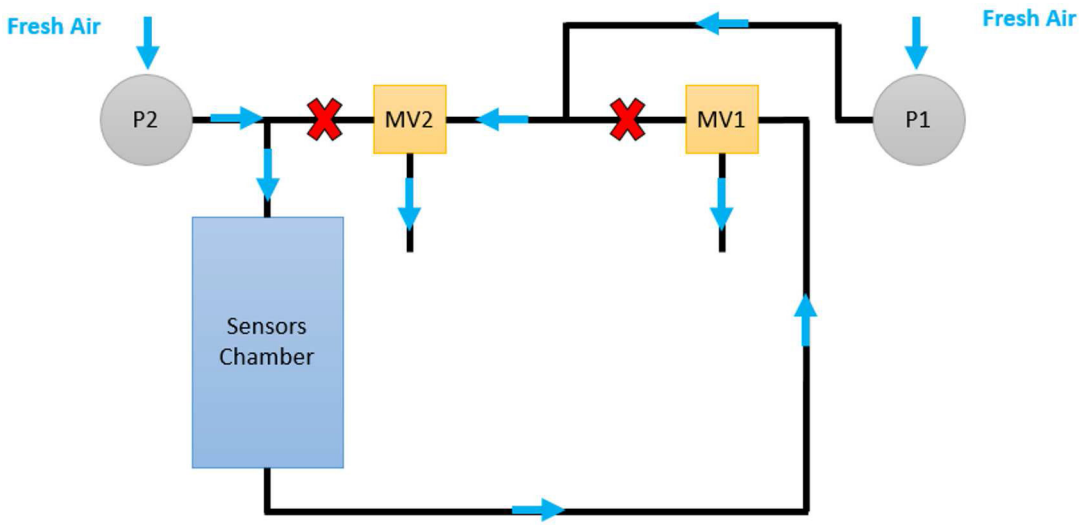

FIGURE 4. Tube circuit configuration for the cleaning stage 1.

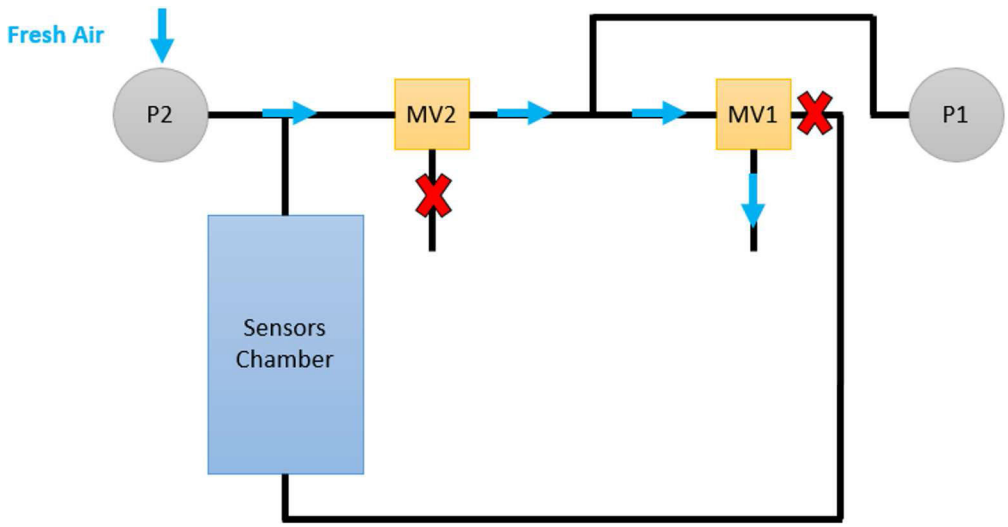

FIGURE 5. Tube circuit configuration for the cleaning stage 2.

TABLE 2. The sensors being used.

Sensors	Sensitive	Output
TGS2600	Air contaminants (H2, Isobutane Ethanol, CO Methane) at low concentrations 1-100ppm	Resistance changes
TGS2603	Odorous gases (ammine-series, H2S) and VOCs (toluene) at low concentrations 1-10 ppm	Resistance changes
TGS2620	Vapours of organic solvents and combustion gases (CO) at high concentrations 100-10000ppm	Resistance changes
SHt71	Temperature and Humidity	Temperature (°C) at +/- 0.4°C Humidity (%RH) at +/- 3.0%RH

sensitive to different gases. The conductivity of the sensor varies in presence in the air of a gas or an odor in the detectable range of the sensor. The higher the gas concentrations, the higher the conductivity of the sensor. A load variable resistance RL, made with potentiometer varying from 0 to 10kΩ, is added to the +5V power supply and allows to perform a voltage divider that converts the evolving conductivity into an electric output signal. The electrical circuit needed to perform a sensor measurement is provided by the sensor's manufacturer in Figure 6:

- $V_c = +5V$, circuit voltage
- $V_h = +5V$, heater voltage
- $V_{out} = V_{RL} =$ Measurement tension or load resistance tension
- R_h: Heater resistance
- R_s: Sensor resistance
- R_L: Load resistance

As the conductivities of the sensors are also affected by temperature and humidity during the measurement,

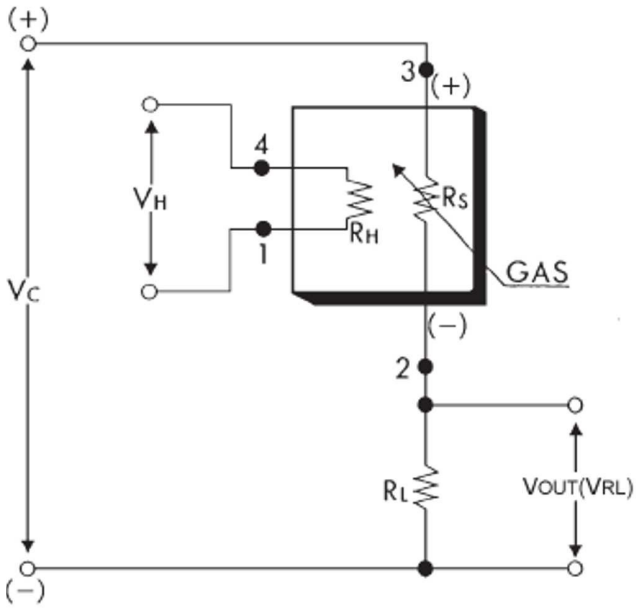

FIGURE 6. Electrical circuit for TGS2600, TGS2603 and TGS2620.

the SHt71 has been placed inside the sensor chamber. Providing both temperature and relative humidity percentage with satisfactory precision, this sensor is essential to carry out relevant analysis of the gas sensors results. The entire e-nose uses an Arduino Yun card. This board has both a microcontroller, the ATmega32u4 with a flash memory of 32KB that controls the 12 digital and the 6 analog pins of the card, and a microprocessor, the Atheros AR9331, which supports a Linux distribution based on OpenWrt - called Linino OS. The processor is also linked with a micro-SD card reader. The communication between the two units is made with the Bridge protocol that is illustrated in Figure 7.

The programme running the e-nose has been written in Arduino programming language. Figure 8 demonstrates the working process of the e-nose. When the user turns on the device, they have to launch the Arduino Serial console on the computer on which the Arduino is plugged to begin the initialization. This serial link has only a debug purpose and will not be used in the final version of the device as it will be completely wireless. However, in this case, it helps to follow each operation step of the e-nose and provide instructions to the user. The initialization opens both the communication with the SD card (that saves the sensors logs) and the wireless communication (with the database hosted on the local network). It also initiates the sensors, notably the SHt71 that is used to send bits of data and needs to be synchronized with the Arduino clock. Once the initialization is completed and the instructions about the manual valve configuration followed, the user can press a push-button to launch the first cleaning stage. This lasts about 200 seconds and cleans the main tube circuit, including the sensor chamber. This cycle is signalled by the first yellow LED. Then, manual valves have to be turned to the "cleaning stage 2 configuration". The push-button is pressed again to start this second cleaning sequence. The second yellow LED will be on until this process is complete. Both cycles cover and clean the air. Next, the user is asked (via the console) to put the gas circuit in analysis and calibration mode and is prompted to press the push button to begin the calibration. This sequence is essential to get exploitable results as the sensors can have issues of repeatability and reproducibility. It consists of measuring a reference gas (i.e., fresh air). A set of calibrated sensor resistance values (R01, R02 and R03) are also recorded. The sensors resistances calibration values are easily calculated by applying Ohm's Law on the sensor mesh (Figure 6) resulting in the following equation:

$$R_s = R0_{x,x=[1,2,3]} = \left(\frac{V_c}{V_{RL_x}} - 1\right) * RL_x \tag{1}$$

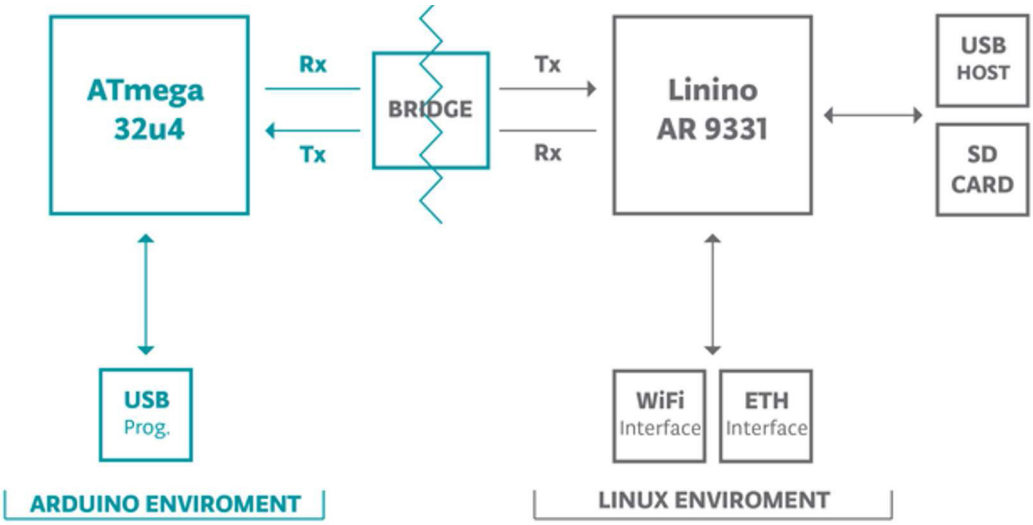

FIGURE 7. Arduino Yun architecture with Bridge Protocol.

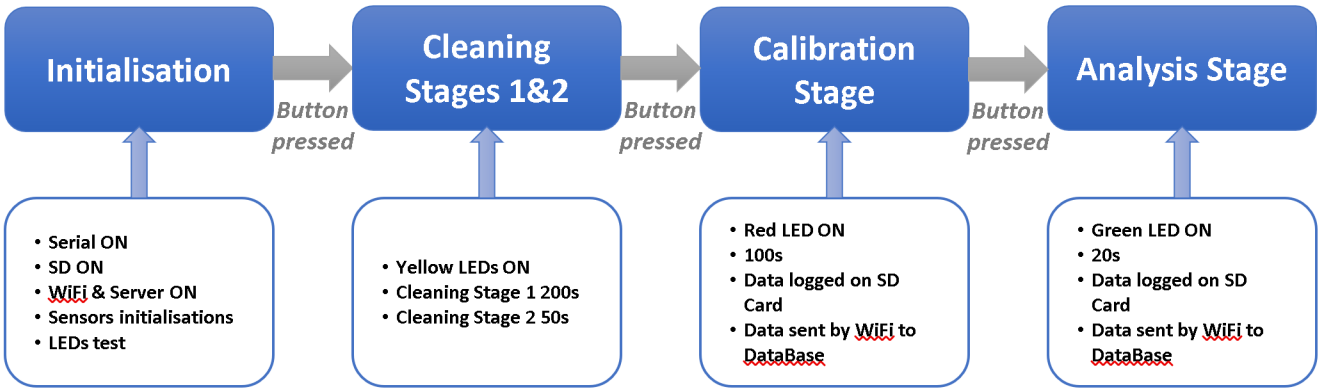

FIGURE 8. Working process of the e-nose.

In this equation, $R0_x$ represents the calibrated resistance of the sensors. The load resistance, RL_x, is fixed with the potentiometer, V_c, is set to +5V (or 1024 as an analog pin is used to read the sensor voltage results and can only take values from 0 to 1023). Finally, V_{RL_x} is the value read on the analog pin of the sensor output. The calibrated values of the temperature, humidity and time logs are then sent into a text file on the SD card and also through wifi to a database. This is done by calling an HTTP request that uses PHP programme to write the values into a specific table. The user can then connect the odorant air input to the sample container for analysis. If the green LED is turned on, the odorant air will be injected after 5 seconds into the e-nose. The measurement time lasts for 60 seconds with a sampling time of 0.5s between each sensor values. Each sensor response is instantly converted into a dimensionless resistance ratio between the current value, Rx, and the calibrated resistance value, R0x, that allows a normalized comparison dealing with the reproducibility issues:

$$\frac{R_{x,x=[1,2,3]}}{R0_{x,x=[1,2,3]}} = \left(\frac{V_c}{V_{RL_x}} - 1\right) * \frac{RL_x}{R0_{x,x=[1,2,3]}} \tag{2}$$

C. DATABASE DEVELOPMENT

The second module of the AROD device is a network-connected database. It was developed on a local network and only enables the communication between linked device via wifi/ethernet. The database has been created using the free software - Xampp - which allows hosting a local server on a computer. It contains the free application - phpMyAdmin - which deals with MySQL databases through a web browser.

Three tables have been created: two are useful for AROD's working process and one will only be used for research analysis. The first table contains the calibrated resistance values of the three gas sensors, time, temperature, and humidity percentage logs of each measurement. This is useful for calibrations or assessing the reproducibility of the reference gas (i.e., fresh air). The second table contains the sensors resistance ratios, time, temperature, and humidity percentage logs of each measurement. Here, the data can be used to obtain a smell identity/fingerprint of the odorant air. Finally, the third table contains all the information which need to be given to the user when the AROD detects a smell registered in the database. As a prototype version, the table currently contains three columns; detected odor, a potential problem that has created the smell and a potential solution to deal with the identified problem.

D. AR VISUAL APPLICATION

The last module of AROD is the AR application. It is used as a user interface that displays the results of the smell analysis in real-time. The application requires two parts to be operative: the executable AR programme (what the user will see) and the AR tool (that will run the program). The program has been developed with the game development platform - Unity. It uses the AR SDK (Software Development Kit) Vuforia, that allows tracking an image target to position/orient the virtual AR content in the real world viewed through HMD. An example image is presented in Figure 9. A 2D virtual screen was created by regrouping all the useful information that will support a maintainer:

- Date and time of analysis
- Temperature and Humidity values
- Ratios of sensors (useful when analyzing an unknown smell)
- Detected odor
- Potential maintenance issues
- Potential maintenance solution and recommendations

It illustrates what the user will see through the HMD when the camera detects the target image; which can either be printed on industrial equipment or on the maintainer tools/suit. The solution is implemented on the Microsoft HoloLens, which is the state-of-the-art Windows 10 exploitation system HMD for AR. To make the demonstrator work, three modules composing AROD need to communicate with each other and exchange data. The architecture of communication is shown in Figure 10. All the added files are hosted on the localhost server, that also contains the database. Once new calibration or analysis data are available, the Arduino sends

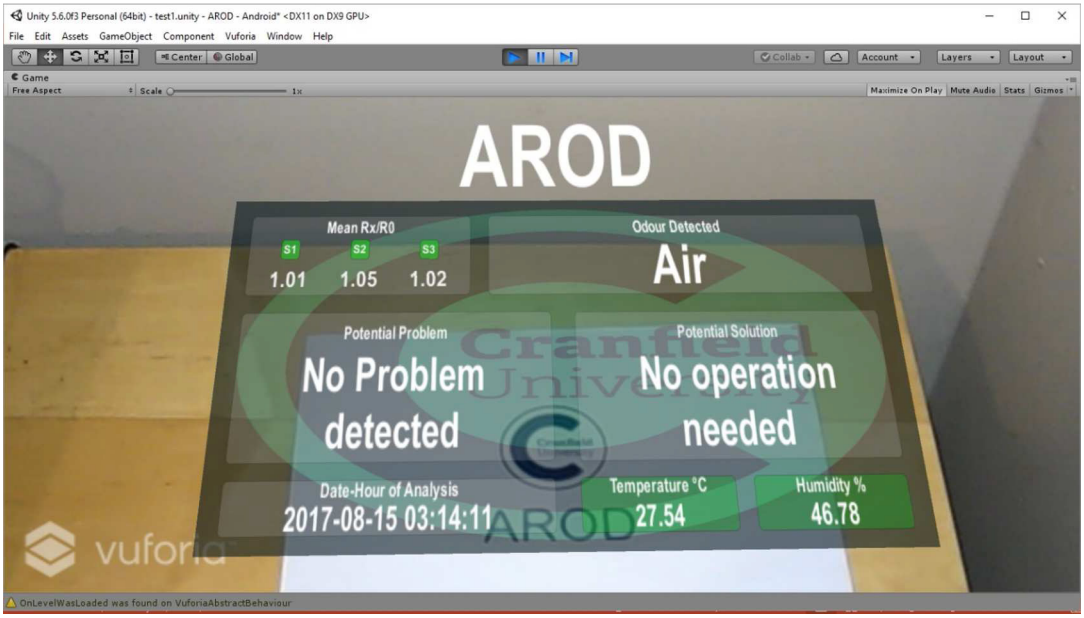

FIGURE 9. Emulator's view of AROD virtual AR screen positioned in real-world according to the image target.

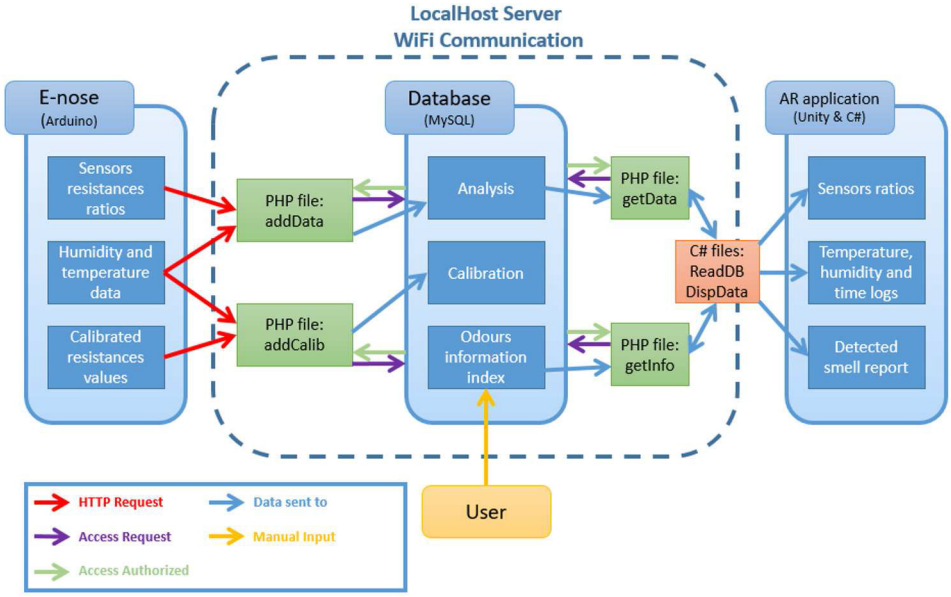

FIGURE 10. Architecture of inter-modules communications in AROD.

HTTP requests that run PHP files. These files connect to the specific table of the database after authorization; by providing the correct username and password to the database. Once the connection is established, the new sensory inputs are written into the table. In the meantime, the AR application runs C/C++ functions that call other similar PHP programs to read and retrieve data from the database. Finally, the program automatically updates the virtual screen with the most recent values.

IV. EXPERIMENTAL WORK

The e-nose module was tested where it was used to collect and analyze the smell composition of four samples with different odors:

- Used engine oil;
- Medical alcoholic solution, *Corsodyl*;
- Sun Lotion, *Nivea*;
- Perfume, *Bleu de Chanel*.

The dynamic headspace sampling technique was used to make the measurements. This technique is based on the projection of continuous fresh air flow in the headspace of the sample while odorant air is analyzed to increase the evaporation rate at the surface of the sample. Consequently, a more odorant particle-concentrated air is injected in the e-nose. The principle is illustrated in Figure 11.

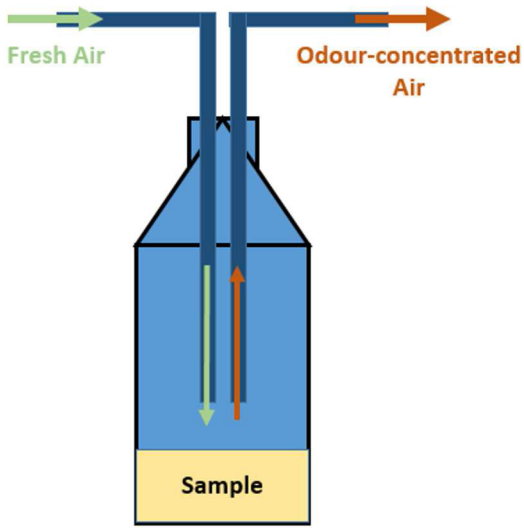

FIGURE 11. Dynamic headspace sampling technique.

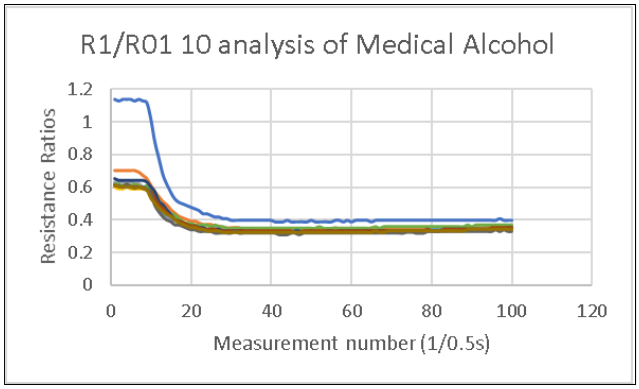

FIGURE 12. R1/R01 results of 10 Medical Alcohol sample analysis, RL = 10kΩ, T = 27°C, 40% < RH < 50%.

For each scent, 10 measures were taken successively using the same process to estimate their odor identities. The calibrated resistances were calculated once at the beginning of the 10-measure series and reused during the whole process. A cleaning sequence was applied between each measurement. The sample was injected for 5 seconds into the e-nose. This was followed up with a second experiment to analyze odor identities. This will help to recognize samples that were randomly analyzed with the *blind test* principle to confirm and validate the smell recognition skill of AROD. Overall 4 different samples were used: medical alcohol, used engine oil, sun lotion and perfume. The results of the experiments have been presented in Figures 12-23. There are three graphs per sample, one for each gas sensor.

A. DISCUSSION OF RESULTS

For each experiment, a number of observations can be made. All Figs 12-23 follow a similar pattern where the ratios jump down to a plateau after the injection of the smell/odorant air. Before and at the beginning of the smell injection, the resistance ratio is close to 1 for the first tests, as only fresh air is inside the sensor chamber. Then, the ratios drop to lower

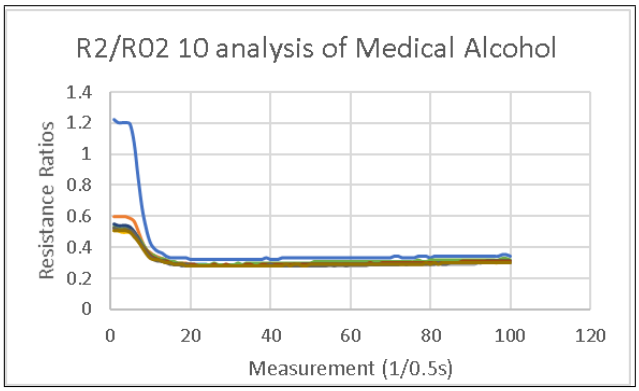

FIGURE 13. R2/R02 results of 10 Medical Alcohol sample analysis, RL = 10kΩ, T = 27°C, 40% < RH < 50%.

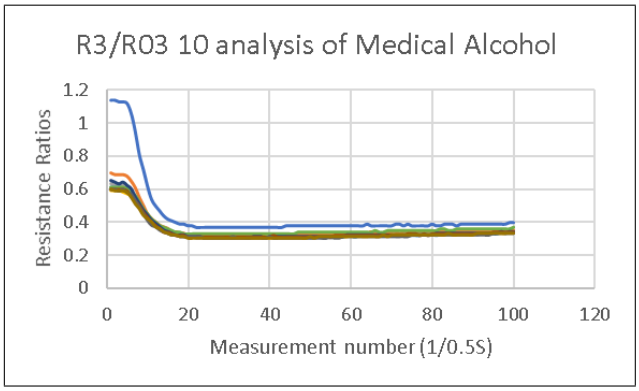

FIGURE 14. R3/R03 results of 10 Medical Alcohol sample analysis, RL = 10kΩ, T = 27°C, 40% < RH < 50%.

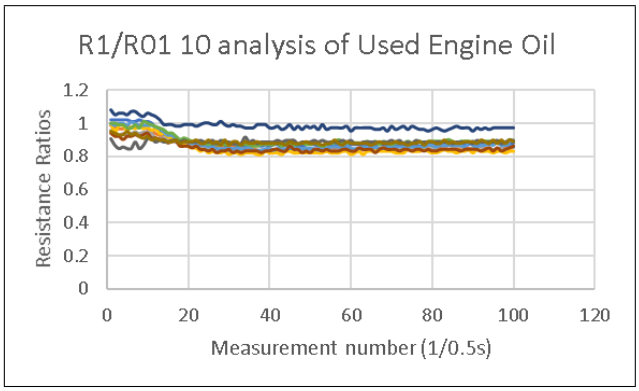

FIGURE 15. R1/R01 results of 10 Used Engine Oil sample analysis, RL = 10kΩ, T = 27°C, 40% < RH < 50%.

values with the successive analysis, especially with strong odors like perfume and medical alcohol. It should be noted that there might still be odorant particles from the previous analysis in the sensor chamber that have not been removed even after the cleaning process.[2] Hence, the cleaning process should be reviewed in the case of strong odors.

[2]The sensor chamber volume is approximately 560cm^3, whereas the pump flow rate is 200mL/min or 200cm^3/min. So, for the cleaning stage 1 (which lasts 200 seconds), the total amount of fresh air injected into the sensor chamber is about 670cm^3. This indicates that the total polluted volume of the sensor chamber is renewed.

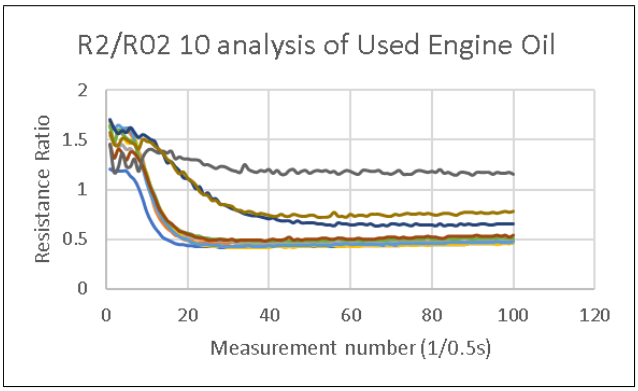

FIGURE 16. R2/R02 results of 10 Used Engine Oil sample analysis, RL = 10kΩ, T = 27°C, 40% < RH < 50%.

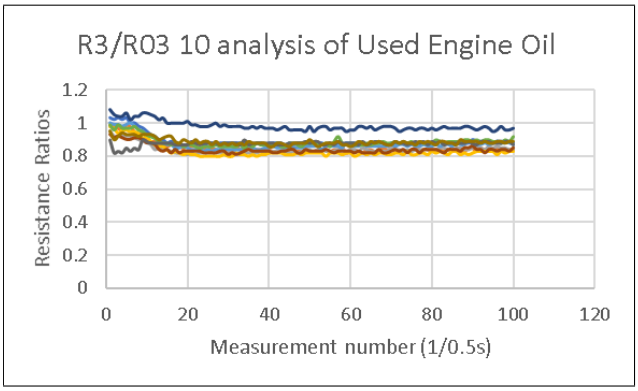

FIGURE 17. R3/R03 results of 10 Used Engine Oil sample analysis, RL = 10kΩ, T = 27°C, 40% < RH < 50%.

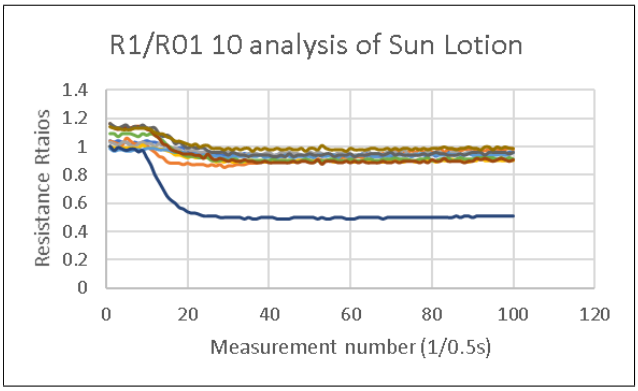

FIGURE 18. R1/R01 results of 10 Sun Lotion sample analysis, RL = 10kΩ, T = 27°C, 40% < RH < 50%.

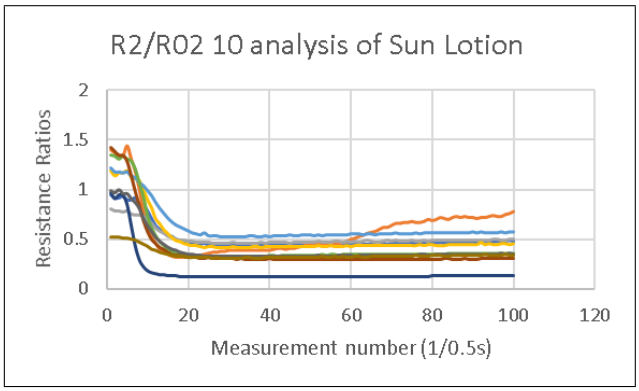

FIGURE 19. R2/R02 results of 10 Sun Lotion sample analysis, RL = 10kΩ, T = 27°C, 40% < RH < 50%.

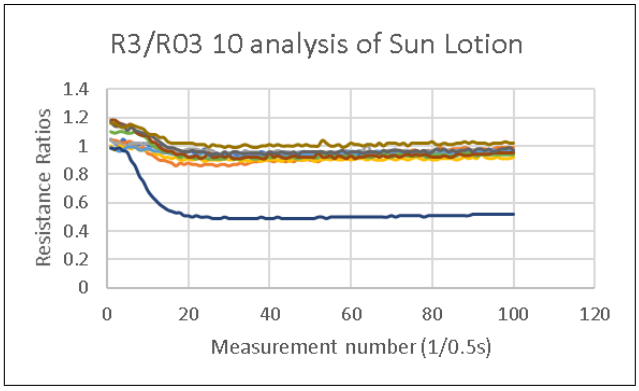

FIGURE 20. R3/R03 results of 10 Sun Lotion sample analysis, RL = 10kΩ, T = 27°C, 40% < RH < 50%.

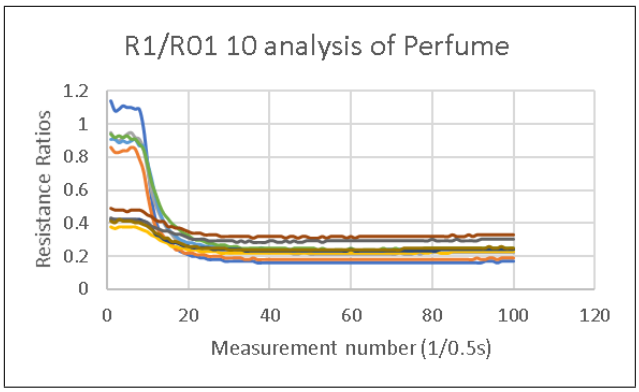

FIGURE 21. R1/R01 results of 10 Perfume sample analysis, RL = 10kΩ, T = 27°C, 40% < RH < 50%.

The second observation is reaching a plateau after a drop of ratios, at the moment the odorant air reaches the sensor chamber. This represents the composition of the air circuit that indicates the moment when the odorant air is injected into the chamber.[3] A partial odor identity, i.e., composed of the results of the three sensors, can now be identified. As the value remains constant until the end in this case, the duration of the analysis could be reduced from a minute to 20 seconds to speed up subsequent experiments.

Although having different sensitivities, sensor 1 and 3 (i.e., TGS2620 and TGS2600), have similar behaviours when used with the four samples of the study. Sensor 2 (TGS2603), that is sensitive to low concentration odorous gases, presents the lowest ratios. This suggests a low dispersion/deviation from the expected values. In most cases, the analysis presents good repeatability of the final plateau, as it converges to similar ratios. The mean and dispersion of each graph are listed in Table 3. The odor identities of the four samples are

[3]This transitional state lasts between 3 to 10 seconds, depending on the sample under analysis.

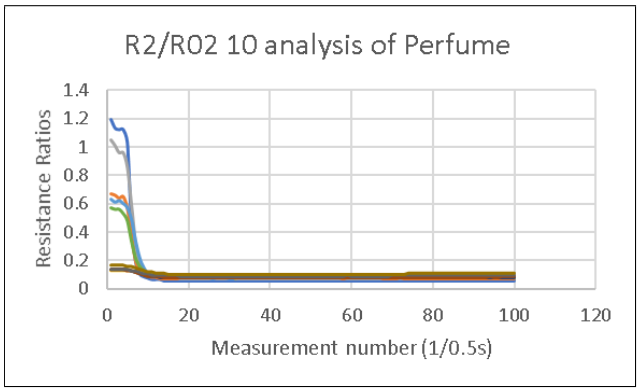

FIGURE 22. R2/R02 results of 10 Perfume sample analysis, RL = 10kΩ, T = 27°C, 40% < RH < 50%.

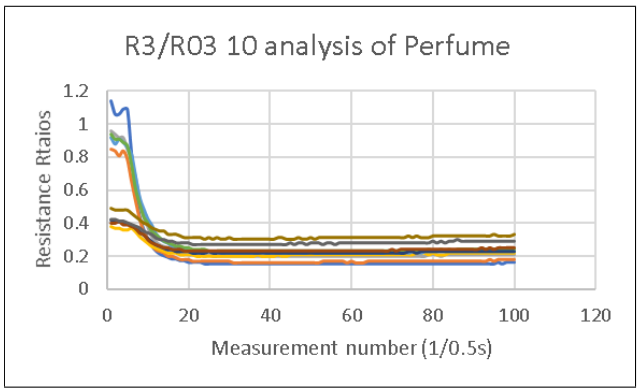

FIGURE 23. R3/R03 results of 10 Perfume sample analysis, RL = 10kΩ, T = 27°C, 40% < RH < 50%.

TABLE 3. Means and dispersions values of the plateau phase of the analysis of the sample.

	Mean	Dispersion
	Medical alcohol	
S1	0.33	0.02
S2	0.29	0.013
S3	0.32	0.02
	Used engine oil	
S1	0.86	0.0422
S2	0.57	0.24
S3	0.86	0.04
	Sun lotion	
S1	0.89	0.14
S2	0.37	0.11
S3	0.9	0.14
	Perfume	
S1	0.24	0.0467
S2	0.08	0.01
S3	0.22	0.04

displayed in Figure 24, where the lower and upper bounds of the dispersion are calculated using the following equations:

Correct identification if:

$$\hat{X}x - \sigma x \leq \frac{R_x}{R0_x} \leq \hat{X}x + \sigma x \tag{3}$$

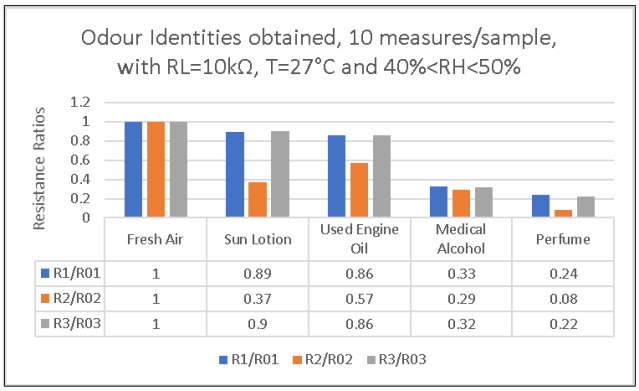

FIGURE 24. Odor Identities of the four samples with fresh air as a reference. The analysis demonstrates the dispersion/deviation from the expected smell values.

Potential identification if:

$$\hat{X}x - 2\sigma x \leq \frac{R_x}{R0_x} \leq \hat{X}x + 2\sigma x \tag{4}$$

In these identification bounding equations, $\hat{X}x$ is the mean of ratios, $x = 1$, 2 or 3. σx is the dispersion of the values for $x = 1$, 2 or 3, and $\frac{R_x}{R0_x}$ is the value of the resistance ratio for the odorant air under analysis.

The sensor values of strong odors, perfume and medical alcohol, have shown little dispersion, i.e., they have assessed the odor correctly. The only exception was sensor 2 when it presented a large dispersion in the used engine oil sample; while the other sensors showed a high dispersion on the sun lotion sample. As a result, the odor identities of both, the oil and the sun lotion, will need to be analyzed with caution due to disparities during the process. This also indicates that they both are made from several important compounds, and their volatilities being less important as compared to perfume and alcohol (which are composed of VOC). The process can be made more robust by adding more sensors with different compounds selectivity and excluding inaccurate sensor readings when estimating an odor identity. None-the-less, this article has developed a prototype of the AROD e-nose and demonstrated a procedure for smell identification of the odorant air.

V. CONCLUSION

A prototype involving AR for olfactory recognition has been developed to help maintenance personnel with identifying maintenance issues based on smells. This device is composed of three modules, an e-nose, a database and an AR application, interacting together via wireless communication. The e-nose is built with low-cost materials and is controlled by an Arduino Yun card. Three gas sensors are implemented in the sensor chamber of the e-nose to execute the smell analysis. This allows determining the odor identity of the sample under study. Results are sent automatically to a local network database developed with phpMyAdmin. Here, the information is recorded and indicates the known odors that the e-nose

has already analyzed. Finally, a C/C++ program performs the smell recognition and displays the results on a Unity developed visual AR application. As a result, the solution provides all the information that the maintainer needs to address the detected industrial issue. To validate the prototype, four smell samples are used (engine oil, perfume, sun lotion and medical alcohol) to assess its performance. It demonstrated repeatability of the samples odor identities, with sensor values converging to a relatively precise area. It also allowed speeding up the measurement time using statistical analysis of the results.

A number of complexities were also recognized during the research. Firstly, there is a need to consider how influential parasite odors can be, especially when there is no ventilation system. It is also worth noting how conducting experiments on different days can cause significant variation in results due to differences in parameters such as sensor sensitivity with the sensor fatigue due to the integrated heaters. This indicates the importance of cleaning of residual odors that are inside the sensor chamber. The e-nose components can also create a persistent smell, e.g., the odor of the plastic box which was used as the sensor chamber and the hot glue which was used to make it airtight. Secondly, the sampling method can be challenged as it injects odorous air with an unknown concentration. The sensor values also evolve depending on both the chemical composition and the air contents. Therefore, the concentration could be different between the two same samples. Finally, variation in the humidity percentage and temperature parameters can influence the results. In this study, the authors had kept the operating temperature at 27°C and the humidity percentage between 40%-50%.

FUTURE WORK

As olfactory-based AR system for industrial maintenance is a novel concept. Integrated with the development of AROD, numerous perspectives on improvements and future works are possible:

- To improve the e-nose, the following considerations can be made:
  - Adding more sensors to differentiate a larger range of odors more precisely
  - Upgrading the sensor chamber material and cleaning process
  - Replacing the manual valves with electro valves to automate the process
- To improve sensor calibration and smell identification analysis, experiments can be carried out with varying temperature/humidity conditions and load resistances parameters;
- To fill the database with new smell identities, a cloud database can be provided as-a-service;
- To improve the AR application, feedback information can be made to have a more aesthetically-pleasing user interface; to ease the understanding of the issue and the potential repair operation for the maintainer.

APPENDIX A
LIST OF HARDWARE AND SOFTWARE FOR ODOUR EMITTING AND TRACKING

FOR SCENT EMISSION

- Scentee device developed by ChatPerf, a Japanese company. This device pluggable on a smartphone (iPhone and Android) delivers a scent when the user receives a text message or a notification. An App is required to make it work. Several scents have been elaborated and are sold as cartridges. For more information see https://scentee.com/
- E-nose is a Dutch company specialized in artificial olfaction. They have developed several electronic noses portable devices, such as *Aeonose*, which test the exhaled air to detect disease. Or *CannaSniffer*, which is often used by the law enforcement authorities to detect cannabis. They also developed *Aetholab* for diseases detection in blood by analysing the gas that evaporates. For more information see http://www.enose.nl/products/

FOR SCENT TRACKING

- E-nose Pty Ltd is an Australian company that has developed electronic noses identifying smells and airborne chemical continuously and in real-time. It is currently in many sectors such as in food, medical or industrial. Their main product is *e-nose Mk3.3* and *e-nose Mk4*. These devices measure odor in the air and create a stream of data. Then this data is processed and diagnosis by an embedded microprocessor and trigger an alarm if the limit is reached. For more information see http://www.e-nose.info/
- Z-nose is an electronic nose device that recognizes multiple odors such as plastics, fuels or fragrance and finds applications in homeland security, environmental, life science, healthcare or in food and beverages. For more information see http://www.estcal.com/
- G.A.S. is an instrument manufacturing company that couples gas chromatography to ion mobility to measure VOC in air. They have developed both hardware and software such as FlavourSpec, BreathSpec, etc. For more information see http://www.gas-dortmund.de/
- The Cyranose® 320 is a portable chemical vapour detector for complex odors, gases and aromas. It uses the NoseChip® array of nanocomposite sensors to recognize the composition oe vapour under analysis. For more information see www.sent.com/productnsiges/cyranose.html/
- AirSense Company has developed numerous electrical nose for odor and gases def thten. Thectioy focus on security, military and industry sectors. For more information see http://www.airsense.com/
- Odormonitor also created devices for measuring the smell of cigarettes, medicines, food, pets, garbage, production process etc. The available devices are

OMX-SRM, OMX-ADM, and OMX-TDM. For more information see http://www.odormonitory.com/

- Aryballe Technologies is a French start-up company that is developing innovative software, sensors and devices to recognize and record a smell, all of that being connected to a smart-phone. A first series of their device NeOse Pro is available upon request. For more information see http://aryballe-technologies.com/

ACKNOWLEDGMENT

Data underlying this study can be accessed through the Cranfield University repository at https://doi.org/10.17862/cranfield.rd.11587053/.

REFERENCES

[1] B. Furht, *Handbook Augmented Reality*. Springer, 2011.
[2] B. S. Martin, *Virtual Reality*. Chicago, IL, USA: Norwood House Press, 2017.
[3] W. R. Sherman and A. B. Craig, *Understanding Virtual Reality: Interface, Application, and Design*. San Mateo, CA, USA: Morgan Kaufmann, 2018.
[4] G. Von Itzstein, M. Billinghurst, R. Smith, and B. Thomas, "Augmented reality entertainment: Taking gaming out of the box," in *Encyclopedia of Computer Graphics and Games*, N. Lee, Ed. Cham, Switzerland: Springer, 2017, pp. 1–9, doi: 10.1007/978-3-319-08234-9_81-1.
[5] D. Mourtzis, V. Zogopoulos, and E. Vlachou, "Augmented reality application to support remote maintenance as a service in the robotics industry," *Procedia CIRP*, vol. 63, pp. 46–51, Jan. 2017.
[6] D. Mourtzis, A. Vlachou, and V. Zogopoulos, "Cloud-based augmented reality remote maintenance through shop-floor monitoring: A product-service system approach," *J. Manuf. Sci. Eng.*, vol. 139, no. 6, p. 061011, 2017.
[7] D. Mourtzis and V. Zogopoulos, "An adaptive framework for augmented reality instructions considering workforce skill," *Procedia CIRP*, vol. 81, pp. 363–368, Jan. 2019.
[8] A. Syberfeldt, O. Danielsson, and P. Gustavsson, "Augmented reality smart glasses in the smart factory: Product evaluation guidelines and review of available products," *IEEE Access*, vol. 5, pp. 9118–9130, 2017.
[9] F. De Crescenzio, M. Fantini, F. Persiani, L. Di Stefano, P. Azzari, and S. Salti, "Augmented reality for aircraft maintenance training and operations support," *IEEE Comput. Graph. Appl.*, vol. 31, no. 1, pp. 96–101, Jan. 2011.
[10] K. Li, G. Y. Tian, X. Chen, C. Tang, H. Luo, W. Li, B. Gao, X. He, and N. Wright, "AR-aided smart sensing for in-line condition monitoring of IGBT wafer," *IEEE Trans. Ind. Electron.*, vol. 66, no. 10, pp. 8197–8204, Oct. 2019.
[11] P. Fraga-Lamas, T. M. Fernandez-Carames, O. Blanco-Novoa, and M. A. Vilar-Montesinos, "A review on industrial augmented reality systems for the industry 4.0 shipyard," *IEEE Access*, vol. 6, pp. 13358–13375, 2018.
[12] O. Blanco-Novoa, T. M. Fernández-Caramés, P. Fraga-Lamas, and M. A. Vilar-Montesinos, "A practical evaluation of commercial industrial augmented reality systems in an industry 4.0 shipyard," *IEEE Access*, vol. 6, pp. 8201–8218, 2018.
[13] L. Zhuang, T. Guo, D. Cao, L. Ling, K. Su, N. Hu, and P. Wang, "Detection and classification of natural odors with an *in vivo* bioelectronic nose," *Biosensors Bioelectron.*, vol. 67, pp. 694–699, May 2015.
[14] A. R. Di Rosa, F. Leone, F. Cheli, and V. Chiofalo, "Fusion of electronic nose, electronic tongue and computer vision for animal source food authentication and quality assessment—A review," *J. Food Eng.*, vol. 210, pp. 62–75, Oct. 2017.
[15] S. Khan and T. Yairi, "A review on the application of deep learning in system health management," *Mech. Syst. Signal Process.*, vol. 107, pp. 241–265, Jul. 2018.
[16] C. A. Tokognon, B. Gao, G. Y. Tian, and Y. Yan, "Structural health monitoring framework based on Internet of Things: A survey," *IEEE Internet Things J.*, vol. 4, no. 3, pp. 619–635, Feb. 2017.
[17] R. Mcwilliam, S. Khan, M. Farnsworth, and C. Bell, "Zero-maintenance of electronic systems: Perspectives, challenges, and opportunities," *Microelectron. Rel.*, vol. 85, pp. 122–139, Jun. 2018.
[18] P. Le Maout, P. S. Laquintinie, C. Lahuec, F. Seguin, J. L. Wojkiewicz, N. Redon, and L. Dupont, "A low cost, handheld e-nose for renal diseases early diagnosis," in *Proc. 40th Annu. Int. Conf. IEEE Eng. Med. Biol. Soc. (EMBC)*, Jul. 2018, pp. 2817–2820.
[19] S. Deshmukh, R. Bandyopadhyay, N. Bhattacharyya, R. Pandey, and A. Jana, "Application of electronic nose for industrial odors and gaseous emissions measurement and monitoring—An overview," *Talanta*, vol. 144, pp. 329–340, Nov. 2015.
[20] S. Kiani, S. Minaei, and M. Ghasemi-Varnamkhasti, "Application of electronic nose systems for assessing quality of medicinal and aromatic plant products: A review," *J. Appl. Res. Medicinal Aromatic Plants*, vol. 3, no. 1, pp. 1–9, Mar. 2016.
[21] N. An, X. Yuan, B. Pan, Q. Li, S. Li, and W. Zhang, "Design of a highly active pt/al 2 o 3 catalyst for low-temperature co oxidation," *RSC Adv.*, vol. 4, no. 72, pp. 38250–38257, 2014.
[22] B. Bayart and A. Kheddar, "Haptic augmented reality taxonomy: Haptic enhancing and enhanced haptics," in *Proc. EuroHaptics*, 2006, pp. 641–644.
[23] J. Rantala, K. Salminen, R. Raisamo, and V. Surakka, "Touch gestures in communicating emotional intention via vibrotactile stimulation," *Int. J. Hum.-Comput. Stud.*, vol. 71, no. 6, pp. 679–690, Jun. 2013.
[24] S. Osman, "Selection of optimally positioned sensors in a glove interface object," U.S. Patent 10 317 997, Jun. 11, 2019.
[25] L. Dipietro, A. Sabatini, and P. Dario, "A survey of glove-based systems and their applications," *IEEE Trans. Syst., Man, Cybern. C, Appl. Rev.*, vol. 38, no. 4, pp. 461–482, Jul. 2008.
[26] R. W. Lindeman and H. Noma, "A classification scheme for multi-sensory augmented reality," in *Proc. ACM Symp. Virtual Reality Softw. Technol.*, 2007, pp. 175–178.
[27] T. Narumi, S. Nishizaka, T. Kajinami, T. Tanikawa, and M. Hirose, "Augmented reality flavors: Gustatory display based on edible marker and cross-modal interaction," in *Proc. SIGCHI Conf. Hum. factors Comput. Syst.*, 2011, pp. 93–102.
[28] J. Wang, J. Erkoyuncu, and R. Roy, "A conceptual design for smell based augmented reality: Case study in maintenance diagnosis," *Procedia CIRP*, vol. 78, pp. 109–114, 2018.
[29] T. Yamada, S. Yokoyama, T. Tanikawa, K. Hirota, and M. Hirose, "Wearable olfactory display: Using odor in outdoor environment," in *Proc. IEEE Virtual Reality Conf. (VR)*, Apr. 2006, pp. 199–206.
[30] Z. Das and N. M. D. B. Neogi, "Model representation and study of essence effect creation through Internet technological aspect," *Innov. Syst. Des. Eng.*, to be published.
[31] C. M. McGinley and M. A. McGinley, "Odor quantification methods & practices at MSW landfills," in *Proc. Waste Manage. Assoc. Annu. Meeting Exhib.*, 1998, p. 11.
[32] A. D. Wilson and M. Baietto, "Advances in electronic-nose technologies developed for biomedical applications," *Sensors*, vol. 11, no. 1, pp. 1105–1176, Jan. 2011.
[33] R. C. Gerkin and J. B. Castro, "The number of olfactory stimuli that humans can discriminate is still unknown," *Elife*, vol. 4, p. e08127, Jul. 2015.
[34] M. Brattoli, G. De Gennaro, V. De Pinto, A. D. Loiotile, S. Lovascio, and M. Penza, "Odour detection methods: Olfactometry and chemical sensors," *Sensors*, vol. 11, no. 5, pp. 5290–5322, May 2011.
[35] T. C. Pearce, S. S. Schiffman, H. T. Nagle, and J. W. Gardner, *Handbook of Machine Olfaction: Electronic Nose Technology*. Hoboken, NJ, USA: Wiley, 2006.
[36] K. Arshak, E. Moore, G. Lyons, J. Harris, and S. Clifford, "A review of gas sensors employed in electronic nose applications," *Sensor Rev.*, vol. 24, no. 2, pp. 181–198, Jun. 2004.
[37] M. Marjani, F. Nasaruddin, A. Gani, A. Karim, I. A. T. Hashem, A. Siddiqa, and I. Yaqoob, "Big IoT data analytics: Architecture, opportunities, and open research challenges," *IEEE Access*, vol. 5, pp. 5247–5261, 2017.
[38] M. Macías, J. Agudo, A. Manso, C. Orellana, H. Velasco, and R. Caballero, "Improving short term instability for quantitative analyses with portable electronic noses," *Sensors*, vol. 14, no. 6, pp. 10514–10526, Jun. 2014.
[39] J. W. Swinnerton, V. J. Linnenbom, and C. H. Cheek, "Determination of dissolved gases in aqueous solutions by gas chromatography," *Anal. Chem.*, vol. 34, no. 4, pp. 483–485, Apr. 1962.

JOHN ERKOYUNCU is currently a Senior Lecturer of digital service engineering with Cranfield University, U.K. He is also the Director of the Through-life Engineering Services Centre. His main research focuses on simulation and visualization of through-life engineering services. His research interests include virtual and augmented reality, risk and uncertainty modeling, enterprise simulation and whole life cost modeling, and degradation assessment. He has extensive experience with securing funding (over five million, since 2013) from Industry, Innovate UK, EPSRC, and EU. He works with organizations, such as BABCOCK International, BAE Systems, Rolls-Royce, NHS, MoD, DSTL, Fisher BioServices, NHS, and OxfordBioMedica across the defense, aerospace, rail, and healthcare sectors. He is also a Chartered Engineer and a Fellow of the Higher Education Academy.

SAMIR KHAN (Member, IEEE) received the Ph.D. degree in control theory from Loughborough University, in 2010. He is currently a Research Scientist with The University of Tokyo, Japan, who has worked on several projects related to fault analysis. He was a leading Researcher working on the no-fault found research project, from 2011 to 2015, at the Through-life Engineering Services Centre, Cranfield University, collaborating with Rolls-Royce, Bombardier Transport, BAE Systems, and the UK MoD. His research spans the areas of control systems, condition monitoring, and artificial intelligence. He has also taught undergraduate and postgraduate level modules at various universities in the U.K. and Japan. His current research interests have been focused on sensor networks and machine learning for aircraft maintenance. He is a Chartered Engineer and also a member of IET.

Cranfield University

CERES Research Repository **https://dspace.lib.cranfield.ac.uk/**

School of Aerospace, Transport and Manufacturing (SATM) Staff publications (SATM)

Olfactory-based augmented reality support for industrial maintenance

Erkoyuncu, John Ahmet

2020-01-29

Attribution 4.0 International

Erkoyuncu J, Khan S. (2020) Olfactory-based augmented reality support for industrial maintenance. IEEE Access, Volume 8, 2020, pp. 30306-30321
https://doi.org/ 10.1109/ACCESS.2020.2970220

Downloaded from CERES Research Repository, Cranfield University